6 Peripheral Equipment

Using the optional peripheral devices outlined in this chapter and the many others available, you will be able to build your own applications for use with the system, thereby better integrating the system into your business environment. This chapter will explain how to connect peripheral equipment to your system. First of all however, we recommend you examine Interfaces, with details on the available connectors on the back of the system Codec.

Peripheral Equipment contains:

- Interfaces
- Document Camera
- VCR / DVD
- Additional Cameras
- Additional Microphones
- TANDBERG DNAM and Speakers
- Stereo Speaker Kit
- Telephone Add-On
- Dual Monitor
- XGA Monitors and Projectors
- VESA Display Power Management
- Digital Monitor Power Management
- Extended Display Identification

6.1 Interfaces

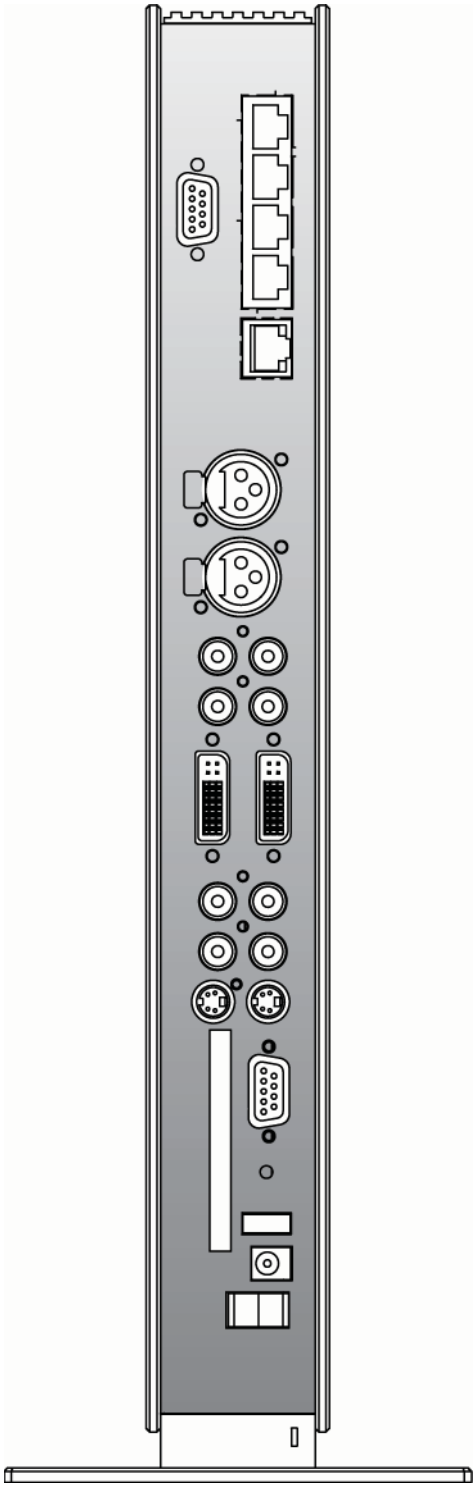

6.1.1 Video

5 Video Inputs

- 1 9 Pin DSUB is used for connecting the TANDBERG Precision HD Camera.
- 1 video inputs supporting S-Video through Mini-DIN connectors.
- 2 video inputs supporting composite signals through RCA connectors.
- 1 VGA/DVI-I (DVI = Digital Video Interface, I = Integrated Digital & Analog) input, analog or digital.

Levels:

- Composite: 1 Vpp, 75 ohm
- S-Video (Y/C):
  - Y: 1 Vpp, 75 ohm
  - C (PAL): 0.3 Vpp, 75 ohm
  - C (NTSC): 0.28 Vpp, 75 ohm

The system will automatically adapt to a PAL or NTSC input.

VGA formats supported on 'DVI-I in':
SVGA (800x600) 60Hz, 72Hz, 75Hz, 85Hz
XGA (1024x768) 60 Hz, 70Hz, 75Hz
SXGA (1280x1024) 60Hz
HD720p (1280x720) 50,60 Hz

4 Video Outputs

- 1 S-Video output, Mini-DIN connector.
- 2 composite video outputs, RCA connectors.
- 1 VGA/DVI-I (DVI = Digital Video Interface, I = Integrated Digital & Analog) output, analog or digital.

The first Mini-DIN connector and the first RCA connector provide main video (incoming/outgoing video and menus).
The other connector provides selfview/still image/Duo Video. The outputs are always active.
The format of the output will be either PAL or NTSC depending on your country's standard video format
The VGA/DVI output provides either main monitor video or second monitor video depending on menu configuration..

Levels:

- Composite: 1 Vpp, 75 ohm
- S-Video (Y/C):
  - Y: 1 Vpp, 75 ohm
  - C (PAL): 0.3 Vpp, 75 ohm

- C (NTSC): 0.28 Vpp, 75 ohm

VGA formats supported on 'DVI-I out':
SVGA (800x600) 75Hz
XGA (1024x768) 60Hz
WXGA (1280x768) 60Hz
HD720p (1280x720) 50,60 Hz

DVI and specifications:

DVI stands for Digital Video Interface, and is a form of video interface technology made to maximize the quality of flat panel LCD monitors and high-end video graphics cards.

The TANDBERG codec contains a DVI-I plug that can transmit either digital DVI signals or standard analog VGA signals, depending on what type of monitor is connected.

DVI Specifications
TANDBERG DVI-I follows the VESA Monitor Timing Standard v1.08, also knows as Display Monitor Timing (DMT).

Supported DVI cables:
TANDBERG supports DVI-D Single-Link, DVI-A and DVI-I Single-Link format cables.

DVI-D cables transmit digital T.M.D.S. signals, DVI-A cables transmit analog VGA signals and DVI-I cables can transmit either digital or analog signals.

It is possible to extend existing DVI cables by the use of extension cables. The maximum cable length however, is 5 meters. Going beyond that may result in quality loss.

Pin	Signal Assignment	Pin	Signal Assignment	Pin	Signal Assignment
1	T.M.D.S. Data2-	9	T.M.D.S. Data1-	17	T.M.D.S. Data0-
2	T.M.D.S. Data2+	10	T.M.D.S. Data1+	18	T.M.D.S. Data0+
3	T.M.D.S. Data2/4 Shield	11	T.M.D.S. Data1/3 Shield	19	T.M.D.S. Data0/5 Shield
4	T.M.D.S. Data4-	12	T.M.D.S. Data3-	20	T.M.D.S. Data5-
5	T.M.D.S. Data4+	13	T.M.D.S. Data3+	21	T.M.D.S. Data5+
6	DDC Clock	14	+5V Power	22	T.M.D.S. Clock Shield
7	DDC Data	15	Ground (return for +5V, HSync and VSync)	23	T.M.D.S. Clock+
8	Analog Vertical Sync	16	Hot Plug Detect	24	T.M.D.S. Clock-
C1	Analog Red	C2	Analog Green	C3	Analog Blue
C4	Analog Horizontal Sync	C5	Analog Ground (analog, R, G & B return)		

DVI-I - Combined Analog and Digital Connector Pin Assignments.

The TANDBERG Edge 75/85/95 MXP is shipped with a PC cable with integrated audio:

DVI-A Plug + 2*RCA Plug to VGA Plug + 3.5mm Stereo Plug, length 6m.

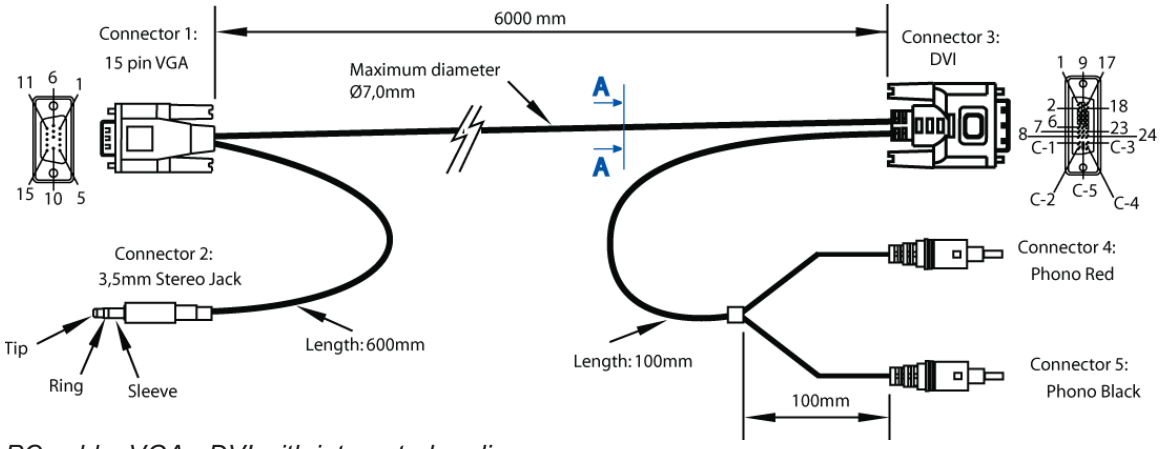

PC cable, VGA - DVI with integrated audio

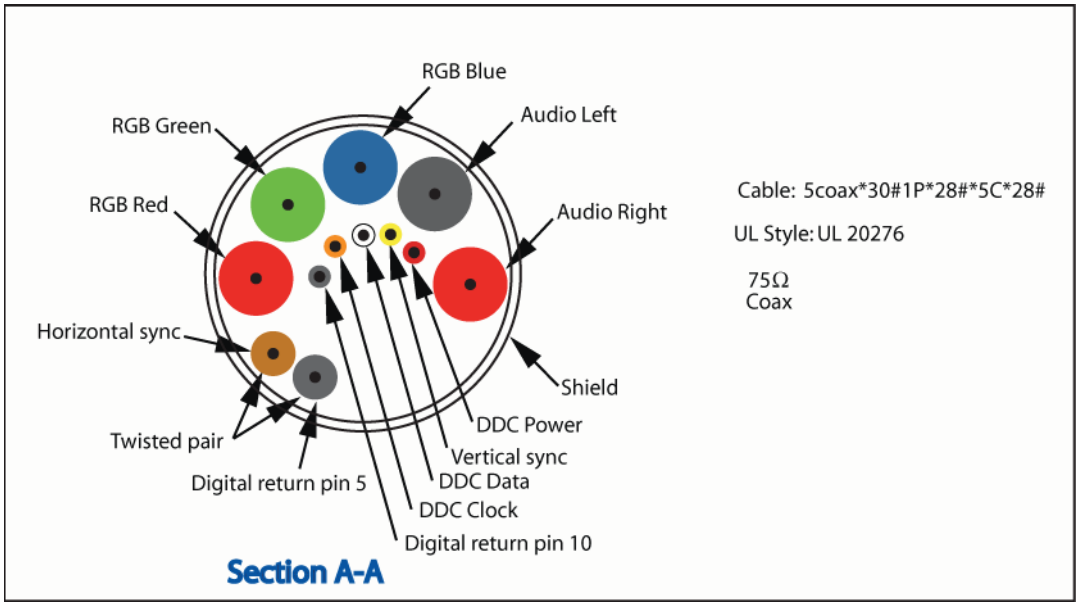

Signal name	CON. 3 Pin	CON. 1 Pin	CON. 5 Pin	CON. 2 Pin	CON. 4 Pin	Cable color
DDC Clock	6	15				Orange
DDC Data	7	12				White
Vertical Sync	8	14				Yellow
DDC Power (+5V)	14, 16	9				Red
Digital return	15	5, 10				Black
RGB Red	C1	1				Red Coax
RGB Green	C2	2				Green Coax
RGB Blue	C3	3				Blue Coax
Horizontal Sync	C4	13				Brown
RGB Return	C5	6, 7, 8				RGB Coax Shield
Outer Shield Ground	Shell	Shell				Outer Shield
Audio Left			Centre	Tip		Audio Black
Audio Right				Ring	Centre	Audio Red
Audio GND			Gnd	Sleeve	Gnd	Audio Shield

PC cable, VGA - DVI with integrated audio

VGA to DVI-A Cable Pinouts

VGA to DVI-A cable male-male 5m black, maximum length 5m.

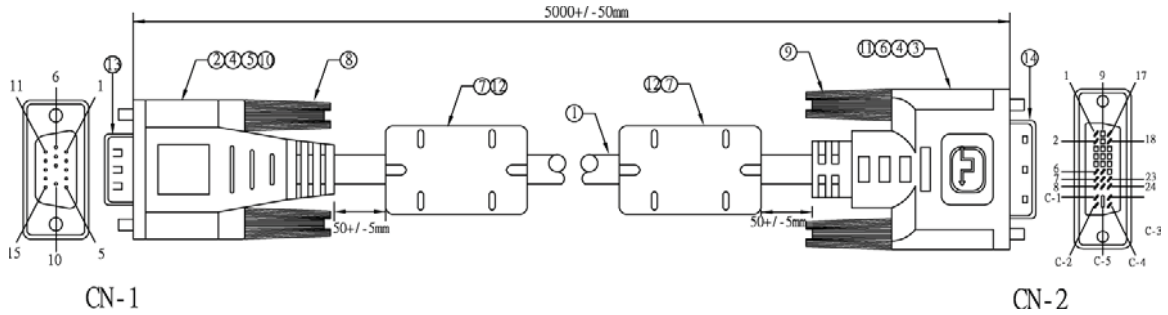

No	Item	Description
1	Cable	UL20276 3Coax*30#+IP*28#+5C*28#+AEB Black OD:7.0mm L-5000mm
2	Connector	HDD 15P Male Black
3	Connector	HDD 17P Male Black
4	Tube	PE Tube Black OD:1.5*10 / 1.0*15 / 1.5*8 / 2.5*10 / 1.5*15 / 5.0*10 mm
5	Metal Can	HDD 15P Male OD:8.5mm
6	Metal Can	HDD 17P Male OD:8.5mm
7	Ferrite	RH 16*28.5*8.0mm
8	Screw	4-40UNC 4*47mm Molded PVC 30P Black
9	Screw	4-40UNC 4*47mm Molded PVC 30P Black
10	Molded	PVC Over mold 45P Black [A991826]
11	Molded	PVC Over mold 45P Black [A2K1188]
12	Molded	PVC Over mold 45P Black [A2K1017]
13	Dust Cover	HDD 15P Dust Cover PE Mold [A2T0225]
14	Dust Cover	DVI Dust Cover PE Mold [A2E1544]

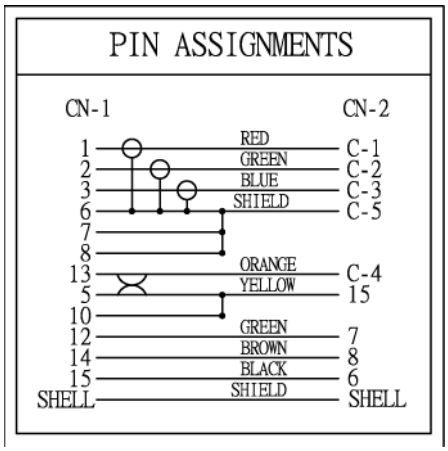

6.1.2 Audio

4 Audio Inputs

- 2 microphone inputs (balanced, 24V phantom powered) via XLR connectors.
- 2 audio inputs (line level) via RCA connectors.

All audio inputs are active by default. For further information, refer to chapter Audio.

Audio input connector specification:

Connector label	Microphone(s)	Audio input(s)
Signal type	Balanced	Unbalanced
Connector (codec)	XLR-F, pin 1-gnd, pin 2 hot, pin 3-cold/neutral	Female RCA/phono, sleeve-ground, centre-signal
Input impedance	2400 ohms (pin 2 - 3)	10K ohms
Max input level when set to minimum input level	83 mVpp	15.5 Vpp
Max input level when set to maximum input level	6.2 mVpp	1.2 Vpp
Range, menu adjustable input gain	22.5 dB (16 steps of 1.5 dB)	22.5 dB (16 steps of 1.5 dB)
Phantom power voltage	24 V +/- 5%	-
Phantom power resistor, pin 2	1200 ohms	-
Phantom power resistor, pin 3	1200 ohms	-
Max phantom power current pr mic	12 mA	-

2 Audio Outputs

- 1 output (line level) via RCA connector providing audio from far end in addition to dial tones. This output is used by the monitor. This output also supports S/PDIF.
- 1 VCR output (line level) via RCA connector providing a mixed signal between audio from the local side (except from the VCR input) and audio from the far end. This output is intended for connection to a VCR.

Audio output connector specification:

Connector label	**Audio outputs**
Signal type	Unbalanced
Connector (codec)	Female RCA/phono, sleeve-ground, centre-signal
Output impedance	680 ohms
Max output level when set to maximum output level and volume control set to max. Max output level when set to minimum output level and volume control set to max.	15.5 Vpp 1.2 Vpp
Range, menu adjustable output gain	22.5 dB (16 steps of 1.5 dB)*
Volume control attenuation (audio out 1)	0 to 21 dB + mute (steps of 1.5 dB)

* Additional attenuation is possible on room/loudspeaker audio output using the volume control setting

6.1.3 Network

Ethernet:
Edge 75 MXP: 1 x Ethernet (RJ-45 Jack) LAN interface (10/100 Mb) up to 768kbps
Edge 85 MXP: 1 x Ethernet (RJ-45 Jack) LAN interface (10/100 Mb) up to 1.1 Mbps
Edge 95 MXP: 1 x Ethernet (RJ-45 Jack) LAN interface (10/100 Mb) up to 2.3 Mbps depending on the software option installed.

To connect the system to a LAN, use the Ethernet cable provided by TANDBERG (or a standard Ethernet cable).

The cable specification is:

1 ---------- 1
2 ---------- 2
3 ---------- 3
6 ---------- 6

If no LAN is available and the codec is connected directly to a computer, use a crossover cable.

The crossover cable specification is:

If such a connection is needed, the system and the PC must use ‘static’ TCP/IP settings because no DHCP server is controlling the small “LAN”, which has been created between the computer and the system. When configuring a back-to-back connection between the PC and the system, make sure both static IP addresses exist on the same subnet.

ISDN BRI Interface:
ISDN I.420 (RJ-45 Jack) Basic Rate Interface S/T (2B+D), 128 kbps per ISDN I/F

To connect the system to BRI, use the ISDN cable provided by TANDBERG (or a standard BRI cable).

The pinout of the S/T interface is:

BRI	Pinout
Pin-3	TX+
Pin-4	RX+
Pin-5	RX-
Pin-6	TX-

6.1.4 Data port

The data port(s) are implemented as Data Communications Equipment (DCE). The connectors used are female 9-pin D-subs.

Signal name	Direction	Pin number
Carrier detect, CD	From DCE	1
Receive data, RXD	From DCE	2
Transmit data, TXD	To DCE	3
Data terminal ready, DTR	From DCE	4
Signal ground, GND		5
Data set ready, DSR	From DCE	6
Ready to send, RTS	To DCE	7
Clear to send, CTS	From DCE	8
Ring indicator, RI	From DCE	9

6.1.5 Camera Port

Camera Port
Pin-outs for the camera port when using the TANDBERG Precision HD Camera:

PRI	Pinout
Pin-8	+12V (presence 2.8mA current source when connected in daisy chain)
Pin-7	GND
Pin-6	TXD (out)
Pin-5	VIDEO LVDS -
Pin-4	VIDEO LVDS +
Pin-3	RXD (in)
Pin-2	GND
Pin-1	+ 12V

Camera Cable
The TANDBERG Edge 75/85/95 MXP system is shipped with a PC cable with integrated audio. See chapter: Interfaces – Video for more information about the camera cable.

NOTE! The enclosed TANDBERG Camera Cables must be used! Do not use other camera cables as this might cause problems with the transfer of video signals from the Precision HD Camera.

6.2 Document Camera

A document camera can be used for showing text, diagrams and a variety of graphical material as well as small three-dimensional objects.

How to use a document camera with your system:

1. Connect the document camera to the Doc Cam input, if available, on the system.
2. Open the Presentation menu from Menu and choose Doc Cam.
3. You can also program the Presentation key on the remote to activate document camera. See chapter Presentation Key for more information.

If you want to use S-Video from the document camera, you can connect the document camera to the AUX input on the system.

Note that this requires a system with an additional video input.

6.3 DVD / VCR

DVD/VCR Playback

Mono
For playback, connect a cable between Video Out on the VCR and Video In (VCR) on the system. Connect a cable between Audio Out on the VCR and the Audio In (VCR) on the system. Choose VCR from the Presentation menu to activate the VCR input.

Make sure that Audio In (VCR) is On (see chapter Audio). If audio from VCR is too low, this level can be adjusted in Audio Settings, Inputs and Level Settings. The audio from the VCR will be audible in the local speaker system.

The audio from the VCR and your microphone(s) will be mixed and sent to the far end. When a person talks on either local or far end, the VCR audio level will be reduced to make it easier to comment on a video recording when Audio Settings, VCR Ducking: On.

Stereo
For stereo playback, connect:

- Video cable between Video Out on the VCR and Video In (VCR) on the system
- Audio cable between Audio Out (L) on the VCR/DVD and the VCR L (Audio In 3)
- Audio cable between Audio Out (R) on the VCR/DVD and VCR R (Audio In 4)
- Choose the VCR video source (se chapter Presentation menu) to automatically activate the VCR audio and video input.

Make sure that:

- Stereo Input Mode is set to On (see chapter Stereo Settings)
- 128 AAC-LD is enabled (see chapter AAC-LD 128 kbps)
- AAC-LD is enabled (see chapter Audio Algorithm)
- Audio In (VCR) is On (see chapter Audio). If audio from VCR is too low, this level can be adjusted in Audio Settings, Inputs, Level Settings. The audio from the VCR will be audible in the local speaker system.
- To enable VCR/DVD ducking (reduce volume when speaking), check that VCR Ducking under Audio Settings is set to On.

Note that the audio from the VCR/DVD and your microphone(s) will be mixed and sent to the far end. When a person talks on either local or far end, the VCR/DVD audio level will automatically be reduced to make it easier to comment on a video recording when Audio Settings, VCR Ducking: On.

VCR - Recording
When recording the VCR will record the video as it appears on the main monitor, the local audio and the audio from the far end.

When recording a videoconference, connect a cable between Video Out 2 on the system and Video In on the VCR. Connect a cable between Audio Out 2 on the system and Audio In on the VCR.

Note that a system with one video output and one mixed (local and far end) audio output is required for recording. For playback, a system with one video input and one audio input without integrated echo cancellation is required.

6.4 Additional Cameras

Extra fixed Cameras

You can connect extra fixed cameras to your system, for example, a whiteboard camera. Connect the video output of the additional camera to one of the available Video inputs on the system.

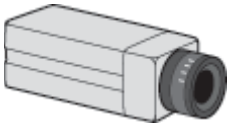

Note that additional controllable cameras are only available for some roll-about systems. Set-tops and personal systems may be able to connect additional cameras.

6.5 Additional Microphones

If your environment is such that you require more than one microphone for your room, e.g. you have a whiteboard at a distance from your table microphone, it is possible to connect additional microphones to your system. See Appendix 4 for more information.

Note that this requires a system with more than one XLR input.

You can connect two microphones to your system. The connectors are marked Mic1, Mic2. The connected microphones will by default be mixed.

When more than one microphone is connected, you have the option to use the Voice Activate Camera Tracking feature.

6.6 Stereo Speaker Kit

Note that the following applies only for systems with a stereo S/PDIF output.

The Stereo Speaker Kit provides an pair of floor-standing loudspeakers in addition to the built-in DNAM. Using these speakers will enable stereo functionality in your system and thereby enhance the sound experience.

To experience stereo sound, the stereo speakers have to be connected to the Digital Natural Audio Module (DNAM) as well as confirming this under Stereo Settings in the main audio menu. The stereo sound source may either be located at the far end, or locally as a sound source (CD, DVD) connected to the codec audio AUX/VCR inputs. If using a local stereo sound source, you also have to enable Stereo I/O mode (On) in the same audio menu, to be able to receive stereo sound on your system, and to send stereo signals to the far end. See chapter 4.5.4 for more information.

Check also that the full-range frequency audio coding AAC-LD is enabled (In Call Quality menu, AAC-LD is checked, and AAC-LD 128 threshold is the same or lower than the call rate you are planning to use). See chapter Audio Algorithm and AAC-LD 128kbps for more information.

An installation sheet is enclosed in the Stereo Loudspeaker Kit, which also describes recommended physical speaker placement. Make sure the complete video system is powered down before connecting the Stereo Speaker Kit.

Note that if stereo speakers are enabled in the menu without having any stereo speakers connected to the Digital NAM, or having other speakers than the TANDBERG stereo speakers, it may cause the acoustic echo-canceller to malfunction.

Stereo Speaker Kit specification:

- 2-way Stereo Speaker system (dual speakers in low- and midrange)
- Passive Crossover Filtering.
- Frequency range 50Hz - 20kHz
- 2 x 130mm low- and midrange loudspeakers, 8 ohms nominal, high quality.
- 1 x 25mm dome tweeter, 6 ohms nominal, high quality
- Long time max power 90 Watt on all loudspeakers
- Enclosed aluminum speaker cabinet

DNAM Stereo Output Cable (from Stereo Speaker Kit)

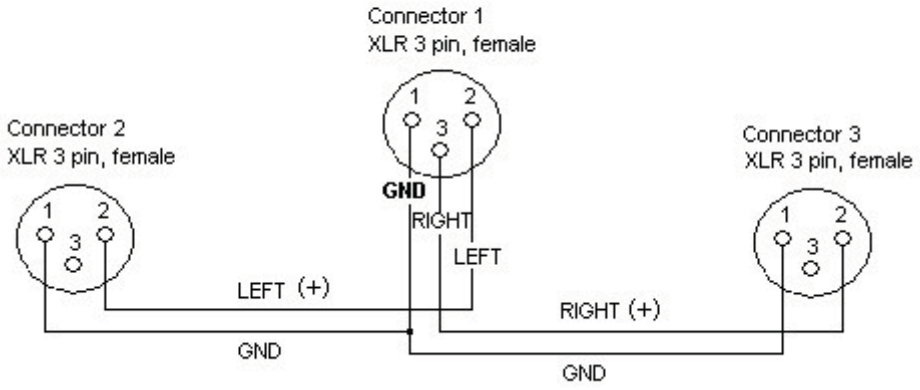

6.7 Telephone Add-On

The system has a built in audio bridge* that can bring in Voice over IP (VoIP) telephony or normal telephone sites using ISDN.

Note that this requires a system with mixed audio output (audio from local and far end) and one audio input without integrated echo cancelling.

In addition to using ISDN and IP for your telephone sites, it is possible to connect a telephone using normal POTS line** by

- Connect the audio out from the conference telephone to the AUX input.
- Connect the audio input from the conference telephone to the AUX output, which provides a mixed signal between local and far end.

*optional MultiSite package available
** require a conference phone with external audio input and output

6.8 Dual Monitor

Note that this requires a system with dual monitor video output.

It is possible to install the system in a Dual Monitor configuration. The Dual Monitor can be used to show full screen selfview, still images and Duo Video.

To use the system in the Dual Monitor configuration:

1. Connect "Video Out 3" (composite video output) on the system to a video input on the dual monitor.
2. Set "Dual Monitor: On" in General Settings menu.

Alternatively you can use a PC monitor as your second monitor:

1. Connect "DVI-I out" on the system to your PC monitor.

6.9 XGA Monitors and Projectors

(Optional)

Some TANDBERG systems can be delivered with optional single or dual TV/XGA monitors. It can also be connected to any DVI/VGA/PAL or NTSC display.

Note that this requires a system with minimum one DVI-I output.

6.10 VESA Display Power Management

Because of the tremendous amount of energy consumed by monitors when operating, the system will reduce power consumption and extend monitor lifecycle by suspending the (switch off) monitors and projectors when the system goes into sleep/standby.

This applies for all VESA Display Power Management compliant displays that are connected to the VGA/DVI output of the system. The display device need to comply with VESA display Power Management system (DPMS).

Note that this requires a system supplied with a VGA/DVI output.

The VESA DPMS standard consists of four modes, Normal, Standby, Suspend and Off, and applies to all Sync formats (e.g. VGA).

DPMS standard:

	Normal	Standby	Suspend	Off
H-sync	On	Off	On	Off
V-sync	On	On	Off	Off
Power savings	None	Minimal	Substantial	Maximum
Recovery time	None	2-3 seconds	2-3 seconds	8-10 seconds

In Off mode some power may still be drawn in order to power indicator lights etc. EDID contains the information on which mode a specific monitor supports.

TANDBERG supports all four modes. However, in F1 and above, all monitors not listed below are automatically set to Off.

Monitor	DPMS mode
Dell	Off
T8000 - Pioneer	Suspend
T6000 - SAMPO	Suspend
Maestro - Projection Design	Off
T7000 - Sharp	Off

6.11 Digital Monitor Power Management

DMPM is monitor power management applied over the digital DVI interface. TANDBERG supports DMPM in software F2 and above. Six monitor power states are defined.

Monitor On Power state
Transmitter (TANDBERG codec) and receiver (Monitor) are powered and active. This power state is equivalent with the DPMS normal mode.

Intermediate Power state
When the codec goes from active to standby, it turns off the DVI transmitter and the monitor can go from Monitor On

Power state to Intermediate Power state

Active-off Power state
The monitor can go from Intermediate Power state to Active-off Power state when the monitor timer expires.

Non-Link Recoverable Off Power State
The monitor can enter Non-Link Recoverable Off Power State when the codec is switched off or if the DVI cable is disconnected. This power state is equivalent to the DPMS “Off (with no DPMS recovery)” state.

Monitor Power Switch Off Power state
This state can be entered when the power switch on the monitor is toggled to its off position. This state has two sub-states dependent on if the codec is switched on or off.

6.12 Extended Display Identification Data (EDID)

Extended Display Identification Data (EDID) is a VESA standard data format that will allow the system to communicate its capabilities, including vendor information like the supported VGA-formats and frequency range limits to a PC connected to the XGA/DVI input.

Note that this requires a system supplied with a XGA/DVI input.

This means that the PC always* will be able to output a valid VGA/DVI signal to the system with no manual reconfiguration of the PC screen settings.

TANDBERG supports EDID structure v1.3, which adheres to the MS Plug & Play definition.

This standard contains information on product ID, basic display parameters, timing identifications and detailed timing descriptions.

In F1 and above, TANDBERG will use the EDID information to decide which resolution to use, 800x600 @ 75Hz or 1024x768 @ 60Hz.

Example (1024x768@60Hz)

Detailed timing description:

PixelClockDiv10000:	6500
Horizontal Active:	1024
Horizontal Blanking:	320
Vertical Active:	768
Vertical Blanking:	38
Horizontal Sync Offset:	24
Horizontal Sync Pulse Width:	136
Vertical Sync Offset:	3
Vertical Sync Pulse Width:	6
Horizontal Image Size:	Not available
Vertical Image Size:	Not available
Horizontal Border:	0
Vertical Border:	0

Tested and verified monitors, EDID & Timing

Listed below are some of the monitors TANDBERG have tested and verified against:

ADI A715
Dell W1700
Dell W1900
EIZO L367
EIZO F730
ErgoScan 400S
Hitachi CM640ET
Hitachi CM769ET
IBM 9494-HBO
IBM G97
IBM E74
IBM 6743-60N
JVC LT-23X475
JVC LT-23C50BU
JVC LT-23X576
LG L3200A
LG M3200C
Löewe TAA112747
MAG D700
MAG DJ707
Panasonic SL75
Pioneer PDP-50MXE10
Pioneer PDP-42MXE10-S
Pioneer PDP-43MXE1-S
Pioneer PDP-50MXE11
Samsung 191T
Samsung 323T

*Need to comply with the VESA EDID standard.